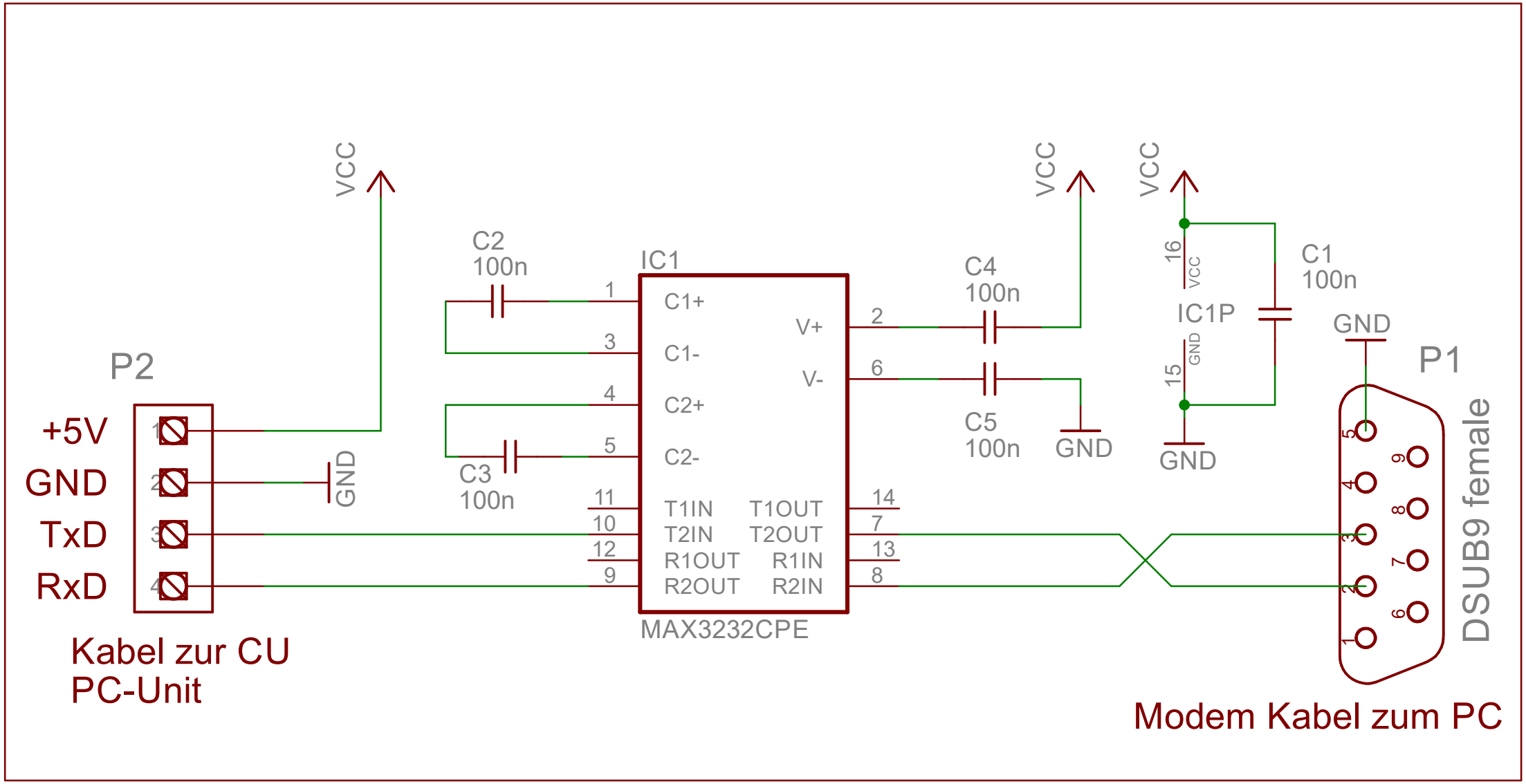
VCC
C2
100n
IC1
C1+
C1-
C2+
C2-
V+
V-
T1IN
T2IN
R1OUT
R2OUT
T1OUT
T2OUT
R1IN
R2IN
MAX3232CPE
C3
100n
C4
100n
C5
100n
GND
VCC
IC1P
C1
100n
P2
+5V
GND
TxD
RxD
Kabel zur CU
PC-Unit
P1
DSUB9 female
Modem Kabel zum PC